*Protected by U.S. Patents No. D636,526; D636,518 Additional Patents Pending

Wellworth Type III Cobra

Description

- Series: ECHUS-EC
- Lamp Life Rating: 100,000 hours
- Lumen Maintenance: 70% over 100,000 hours
- Light Output: 5000K, 82-85 CRI
- IP Rating: IP65
- Applications: Freeway, highway, secondary roads
- EPA: 1.6ft^2
- Warranty: 10 Year Limited

Specifications and Patent Pending Features

- Specular reflector optimized for induction lamp geometry
- Integrated heat sink system for extended life
- Acrylic lens with Type III, medium throw prescription
- Heavy duty aluminum/hybrid interior design with increased durability for harsh environments
- Excellent vibration & shock resistance
- Fixture body 80% recycled polycarbonate resin

Ordering Information

Series

ECHUS-EC — [ ] — [ ] — [ ] — [ ] — [ ]

Wattage[1]

40W
55W
70W
80W
100W
120W
150W

Voltage[2]

120–120-277V
347–347V*
480–480V*

Color Temp

50–5000K
40–4000K*

Photo Cell

TL–Twist Lock
BPC–Blank

Mounting[3] Hardware

X–None
EMH-CCH*
EMH-SSM*

Black = Standard
Grey * = Upgrade options available upon request

Example: **ECHUS-EC**-70-120-50-TL-X

Recommended Roadway Lighting

IES Recommended Spacing	100W
Local	350’
Collector	220’
Major	140’
Expressway/Freeway A	100’
Freeway B	150’

Grid Statistics	100W
Average	0.4fc
Max	1.2fc
Min	0.1fc
Max/Min	12.0
Avg/Min	4.0

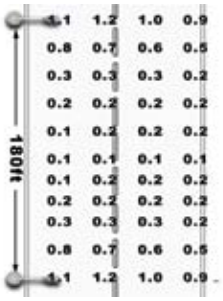

*Legal Notice: Full Spectrum Solutions owns proprietary rights in the EverLast® Series of fixtures in the form of U.S. Patents No. D636,526; D636,518 Additional Patents Pending.

EverLast® Lighting A Product of Full Spectrum Solutions, Inc. 2009, All Rights Reserved
888-383-7578 www.everlastlight.com
2021 Wellworth Ave. Jackson Michigan, 49203 U.S.A.

Dimensions

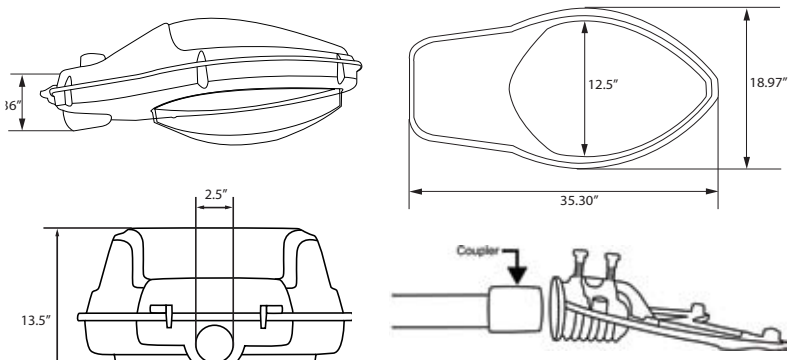

Coupler required for mounting applications with pole outside diameter less than 2". Please contact EverLast® for more information.

Photometric Data

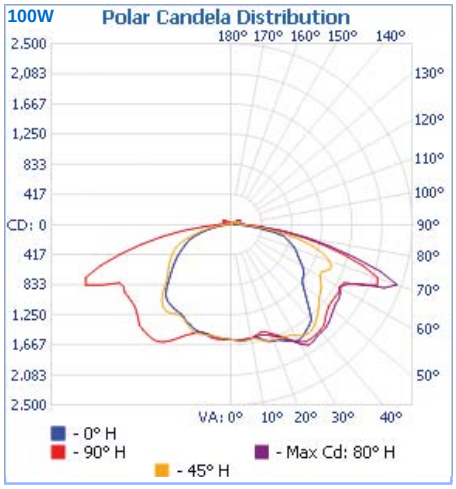

Lamp Specifications

Wattage	Lumens	L/W Ratio	CRI	CCT (KELVIN)	Rated Life
ECHUS-EC-40W	3,350	84	82-85	5000	100,000 hours
ECHUS-EC-55W	4,650	84	82-85	5000	100,000 hours
ECHUS-EC-70W	5,900	84	82-85	5000	100,000 hours
ECHUS-EC-80W	7,150	84	82-85	5000	100,000 hours
ECHUS-EC-100W	8,400	84	82-85	5000	100,000 hours
ECHUS-EC-120W	10,100	84	82-85	5000	100,000 hours
ECHUS-EC-150W	12,600	84	82-85	5000	100,000 hours

Ballast Specifications

System Wattage	Input Voltage	Input Current	Input Freq.	Power Factor	Ambient Temp	THD
44W	120-277V/480V*	0.38-0.17A / 0.10A	50/60Hz	>0.95	-40 to 130 F°	<10%
61W	120-277V/480V*	0.50-0.21A / 0.13A	50/60Hz	>0.95	-40 to 130 F°	<10%
78W	120-277V/480V*	0.63-0.29A / 0.16A	50/60Hz	>0.95	-40 to 130 F°	<10%
90W	120-277V/480V*	0.70-0.32A / 0.19A	50/60Hz	>0.95	-40 to 130 F°	<10%
111W	120-277V/480V*	0.93-0.42A / 0.22A	50/60Hz	>0.95	-40 to 130 F°	<10%
134W	120-277V/480V*	1.05-0.46A / 0.28A	50/60Hz	>0.95	-40 to 130 F°	<10%
165W	120-277V/480V*	1.35-0.61A / 0.35A	50/60Hz	>0.95	-40 to 130 F°	<10%

Application Image - ECHUS-EC

Frisco Bay Marina, Frisco CO

*Legal Notice: Full Spectrum Solutions owns proprietary rights in the EverLast® Series of fixtures in the form of U.S. Patents No. D636,526; D636,518 Additional Patents Pending.

EverLast® Lighting A Product of Full Spectrum Solutions, Inc. 2009, All Rights Reserved
888-383-7578 www.everlastlight.com
2021 Wellworth Ave. Jackson Michigan, 49203 U.S.A.

*Protected by U.S. Patents No. D636,526; D636,518 Additional Patents Pending

Wellworth Bi-Level Type III Cobra

Description

- Series: ECHUS-EC-BL
- Lamp Life Rating: 100,000 hours
- Lumen Maintenance: 70% over 100,000 hours
- Light Output: 5000K, 82-85 CRI
- IP Rating: IP65
- Applications: Freeway, highway, secondary roads
- EPA: 1.6ft^2
- Warranty: 10 Year Limited

Specifications and Patented Features

- Bi-Level Ballast dims to 40% power for additional energy savings
- Specular reflector optimized for induction lamp geometry
- Integrated heat sink system for extended life
- Acrylic lens with Type III, medium throw prescription
- Full cutoff heavy duty aluminum/hybrid interior design with increased durability for harsh environments
- Excellent vibration & shock resistance
- Fixture body 80% recycled polycarbonate resin

Ordering Information

Series

ECHUS-EC — [ ] — **BL** — [ ] — [ ] — [ ] — [ ]

Wattage[1]
70W
80W
100W
120W

Voltage[2]
120–120-277V
347–347V*
480–480V*

Color Temp
50–5000K
40–4000K*

Photo Cell
TL–Twist Lock
BPC–Blank

Mounting[3] Hardware
X–None
EMH-CCH*
EMH-SSM*

Black = Standard
Grey * = Upgrade options available upon request

Example: **ECHUS-EC**-70-**BL**-120-50-TL-X

Recommended Roadway Lighting

IES Recommended Spacing	100W
Local	350’
Collector	220’
Major	140’
Expressway/Freeway A	100’
Freeway B	150’

Grid Statistics	100W
Average	0.4fc
Max	1.2fc
Min	0.1fc
Max/Min	12.0
Avg/Min	4.0

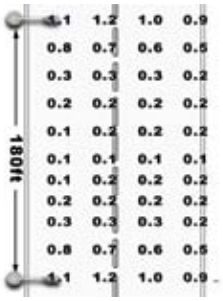

*Legal Notice: Full Spectrum Solutions owns proprietary rights in the EverLast® Series of fixtures in the form of U.S. Patents No. D636,526; D636,518 Additional Patents Pending.

EverLast® Lighting A Product of Full Spectrum Solutions, Inc. 2009, All Rights Reserved
888-383-7578 www.everlastlight.com
2021 Wellworth Ave. Jackson Michigan, 49203 U.S.A.

Dimensions

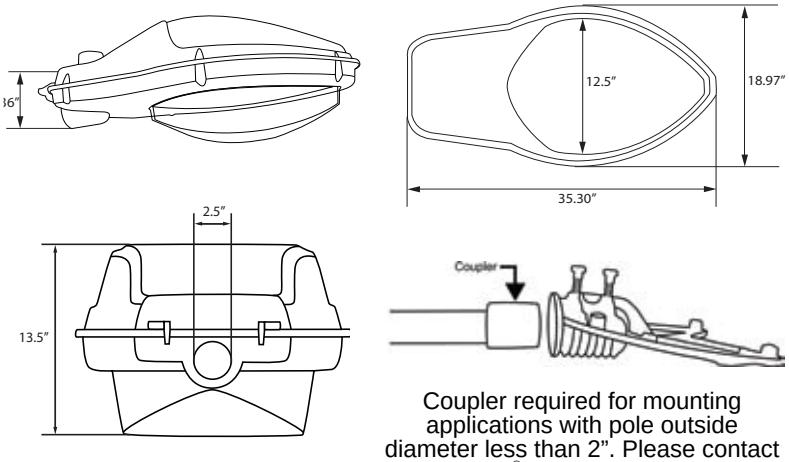

Coupler required for mounting applications with pole outside diameter less than 2". Please contact EverLast® for more information.

Photometric Data

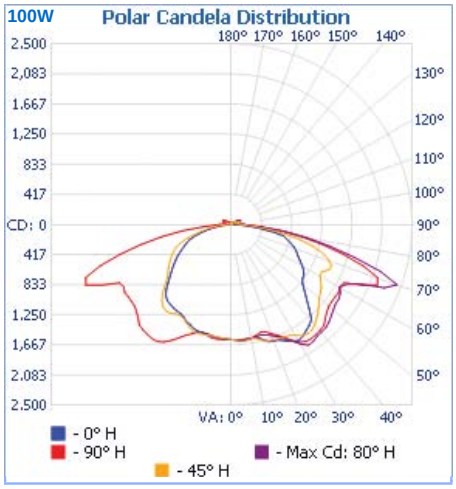

Lamp Specifications

Wattage	Lumens	L/W Ratio	CRI	CCT (KELVIN)	Rated Life
ECHUS-EC-70W	5,900	84	82-85	5000	100,000 hours
ECHUS-EC-80W	7,150	84	82-85	5000	100,000 hours
ECHUS-EC-100W	8,400	84	82-85	5000	100,000 hours
ECHUS-EC-120W	10,100	84	82-85	5000	100,000 hours

Ballast Specifications

System Wattage	Input Voltage	Input Current	Input Freq.	Power Factor	Ambient Temp	THD
78W	120-277V/480V*	0.63-0.29A / 0.16A	50/60Hz	>0.95	-40 to 130 F°	<10%
90W	120-277V/480V*	0.70-0.32A / 0.19A	50/60Hz	>0.95	-40 to 130 F°	<10%
111W	120-277V/480V*	0.93-0.42A / 0.22A	50/60Hz	>0.95	-40 to 130 F°	<10%
134W	120-277V/480V*	1.05-0.46A / 0.28A	50/60Hz	>0.95	-40 to 130 F°	<10%

Application Image - ECHUS-EC-BL

Frisco Bay Marina, Frisco CO

*Legal Notice: Full Spectrum Solutions owns proprietary rights in the EverLast® Series of fixtures in the form of U.S. Patents No. D636,526; D636,518 Additional Patents Pending.

EverLast® Lighting A Product of Full Spectrum Solutions, Inc. 2009, All Rights Reserved
888-383-7578 www.everlastlight.com
2021 Wellworth Ave. Jackson Michigan, 49203 U.S.A.

PVW Hybrid Induction Lighting System

Description

- Wattage: 70W Bi-Level and 100W Bi-Level
- Lamp Life Rating: 100,000 hours
- Lumen Maintenance: 70% over 100,000 hours
- Light Output: 5000K, 82-85 CRI
- IP Rating: IP65
- Excellent vibration & shock resistance
- Applications: Parking lots, roadway and off-grid locations
- EPA: 1.7ft^2

Specifications and Patent Pending Features

EverLast® PVW is a solar and wind powered area light system, topped by a wind turbine, two solar panels, and a battery to store energy. Energy-efficient, sensor controlled EverLast® induction lamps make this green technology possible. EverLast® PVW is compact in size, free-standing and completely off the grid, allowing municipalities to reduce spending by reducing energy and maintenance costs associated with lighting systems.

Description	Specifications
Rated Output Power (W)	500
Max. Output Power (W)	600
Rated Wind Speed (m/s)	12.5
Rated Rotation Speed (rpm)	450
Start-Up Wind Speed (m/s)	2.3
Cut-In Wind Speed (m/s)	3
Rotor Diameter (m)	2.5 m
Blade Material	Fiberglass
Governor System	Electromechanical Brake Mechanical Yaw
Governor Wind Speed (m/s)	60
Shut-Down Mechanism	Electromechanical Brake
Battery System (Volts)	24V
PVW Hybrid Controller	included

Description	Specifications
Over-Speed Protection	yes
Low-Voltage Protection	yes
Over-Voltage Protection	yes
Weight (kg)	19
Solar Module	polycrystalline type
Max. Output Power	350Wp
Voltage at Max. Power (Vmp)	35 VDC
Current at Max. Power (A)	4.95 x 2
Open-Circuit Voltage (Voc)	41
Short-Circuit Current (Vsc)	3.25 ± 0.20
Street Lamp	70W energy saving induction lamp
Deep-Cycle Battery	210 Ah

***Legal Notice:** Full Spectrum Solutions owns proprietary rights in the EverLast® Remote Induction Street Light in the form of patent pending applications in the US and PCT applications for International protection.

EverLast® Lighting A Product of Full Spectrum Solutions, Inc. 2009, All Rights Reserved
888-383-7578 www.everlastlight.com
2021 Wellworth Ave. Jackson Michigan, 49203 U.S.A.

Dimensions

ECHUS-EC-70W Cobra Head

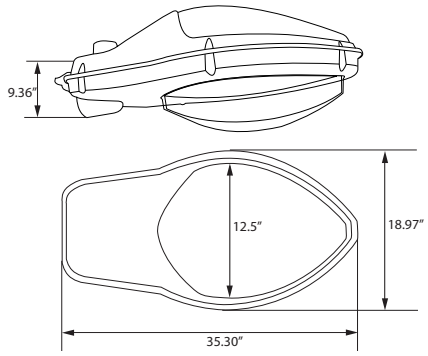

ESBUS-EC-70W Shoe Box

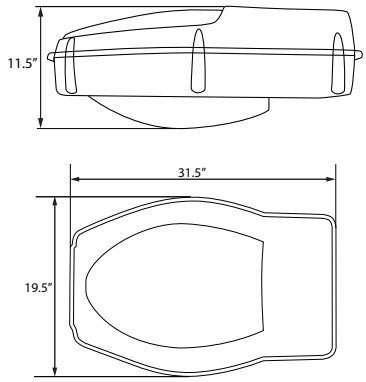

Photometric Data

ECHUS-EC-70W Cobra Head

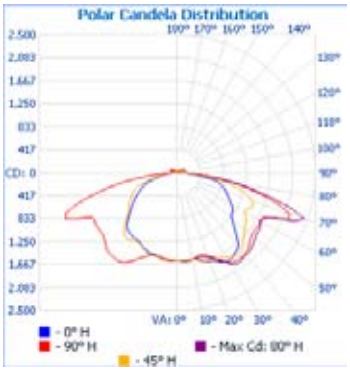

ESBUS-EC-70W Shoe Box

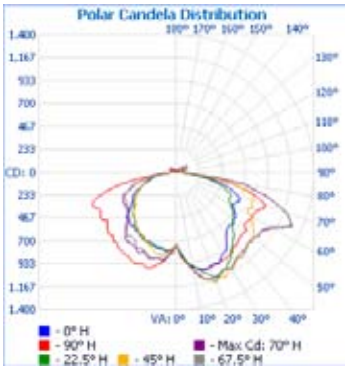

Application Image - PVW Hybrid Induction Lighting System

NASA Johnson Space Center, Houston TX

***Legal Notice:** Full Spectrum Solutions owns proprietary rights in the EverLast® Remote Induction Street Light in the form of patent pending applications in the US and PCT applications for International protection.

EverLast® Lighting A Product of Full Spectrum Solutions, Inc. 2009, All Rights Reserved
888-383-7578 www.everlastlight.com
2021 Wellworth Ave. Jackson Michigan, 49203 U.S.A.

*Protected by U.S. Patents No. D636,526; D636,518 Additional Patents Pending

Wellworth Shoe Box

Description

- Series: ESBUS-EC
- Lamp Life Rating: 100,000 hours
- Lumen Maintenance: 70% over 100,000 hours
- Light Output: 5000K, 82-85 CRI
- IP Rating: IP65
- Applications: Parking lot, athletic courts, and off road areas
- EPA: 1.7ft^2
- Warranty: 10 Year Limited

Specifications and Patent Pending Features

- Specular reflector optimized for induction lamp geometry
- Integrated heat sink system for extended life
- Acrylic lens with Type IV prescription
- Full cutoff heavy duty aluminum/hybrid interior design with increased durability for harsh environments
- Excellent vibration & shock resistance
- Fixture body 80% recycled polycarbonate resin

Ordering Information

Series

ESBUS-EC — [ ] — [ ] — [ ] — [ ] — [ ]

Wattage[1]

40W
55W
70W
80W
100W
120W
150W

Voltage[2]

120–120-277V
347–347V*
480–480V*

Color Temp

50–5000K
40–4000K*

Photo Cell

X–None
TL–Twist Lock*

Mounting[3] Hardware

X–None
EMH-JB-R-US*
EMH-JB-S-US*
EMH-KSF*

Black = Standard
Grey * = Upgrade options available upon request

Example: **ESBUS-EC**-150-120-50-X-X

*Legal Notice: Full Spectrum Solutions owns proprietary rights in the EverLast® Series of fixtures in the form of U.S. Patents No. D636,526; D636,518 Additional Patents Pending.

EverLast® Lighting A Product of Full Spectrum Solutions, Inc. 2009, All Rights Reserved
888-383-7578 www.everlastlight.com
2021 Wellworth Ave. Jackson Michigan, 49203 U.S.A.

Dimensions

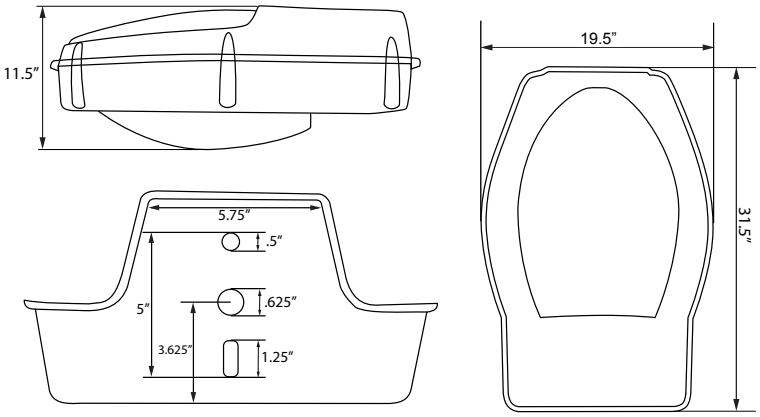

Photometric Data

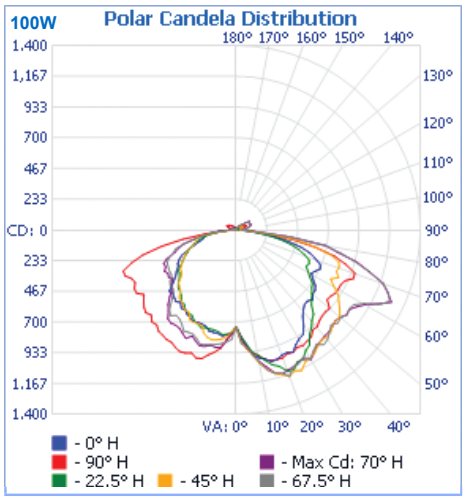

Lamp Specifications

Wattage	Lumens	L/W Ratio	CRI	CCT (KELVIN)	Rated Life
ESBUS-EC-40W	3,350	84	82-85	5000	100,000 hours
ESBUS-EC-55W	4,650	84	82-85	5000	100,000 hours
ESBUS-EC-70W	5,900	84	82-85	5000	100,000 hours
ESBUS-EC-80W	7,150	84	82-85	5000	100,000 hours
ESBUS-EC-100W	8,400	84	82-85	5000	100,000 hours
ESBUS-EC-120W	10,100	84	82-85	5000	100,000 hours

Ballast Specifications

System Wattage	Input Voltage	Input Current	Input Freq.	Power Factor	Ambient Temp	THD
44	120-277V/480V*	0.38-0.17A / 0.10A	50/60Hz	>0.95	-40 to 130 F°	<10%
61	120-277V/480V*	0.50-0.21A / 0.13A	50/60Hz	>0.95	-40 to 130 F°	<10%
78W	120-277V/480V*	0.63-0.29A / 0.16A	50/60Hz	>0.95	-40 to 130 F°	<10%
90W	120-277V/480V*	0.70-0.32A / 0.19A	50/60Hz	>0.95	-40 to 130 F°	<10%
111W	120-277V/480V*	0.93-0.42A / 0.22A	50/60Hz	>0.95	-40 to 130 F°	<10%
134W	120-277V/480V*	1.05-0.46A / 0.28A	50/60Hz	>0.95	-40 to 130 F°	<10%

Application Image - ESBUS-EC

Mondavi Center For The Performing Arts, Davis CA

*Legal Notice: Full Spectrum Solutions owns proprietary rights in the EverLast® Series of fixtures in the form of U.S. Patents No. D636,526; D636,518 Additional Patents Pending.

EverLast® Lighting A Product of Full Spectrum Solutions, Inc. 2009, All Rights Reserved
888-383-7578 www.everlastlight.com
2021 Wellworth Ave. Jackson Michigan, 49203 U.S.A.

*Protected by U.S. Patents No. D636,526; D636,518 Additional Patents Pending

Wellworth Bi-Level Shoe Box

Description

- Series: ESBUS-EC-BL
- Lamp Life Rating: 100,000 hours
- Lumen Maintenance: 70% over 100,000 hours
- Light Output: 5000K, 82-85 CRI
- IP Rating: IP65
- Applications: Parking lot, athletic courts, and off road areas
- EPA: 1.7ft^2
- Warranty: 10 Year Limited

Specifications and Patent Features

- Bi-Level Ballast dims to 40% power for additional energy savings
- Specular reflector optimized for induction lamp geometry
- Integrated heat sink system for extended life
- Acrylic lens with Type IV prescription
- Full cutoff heavy duty aluminum/hybrid interior design with increased durability for harsh environments
- Excellent vibration & shock resistance
- Fixture body 80% recycled polycarbonate resin

Ordering Information

Series

ESBUS-EC — [ ] — **BL** — [ ] — [ ] — [ ] — [ ]

Wattage[1]
- **70W**
- **80W**
- **100W**
- **120W**
- **150W**

Voltage[2]
- **120**–120-277V
- **347**–347V*
- **480**–480V*

Color Temp
- **50**–5000K
- **40**–4000K*

Photo Cell
- **X**–None
- **TL**–Twist Lock*

Mounting[3] Hardware
- **X**–None
- EMH-JB-R-US*
- EMH-JB-S-US*

Black = Standard
Grey * = Upgrade options available upon request

Example: **ESBUS-EC**-100-**BL**-120-50-TL-X

*Legal Notice: Full Spectrum Solutions owns proprietary rights in the EverLast® Series of fixtures in the form of U.S. Patents No. D636,526; D636,518 Additional Patents Pending.

EverLast® Lighting A Product of Full Spectrum Solutions, Inc. 2009, All Rights Reserved
888-383-7578 **www.everlastlight.com**
2021 Wellworth Ave. Jackson Michigan, 49203 U.S.A.

Dimensions

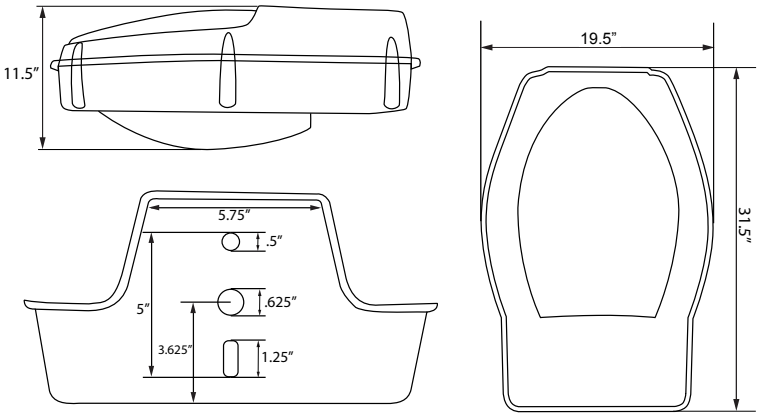

Photometric Data

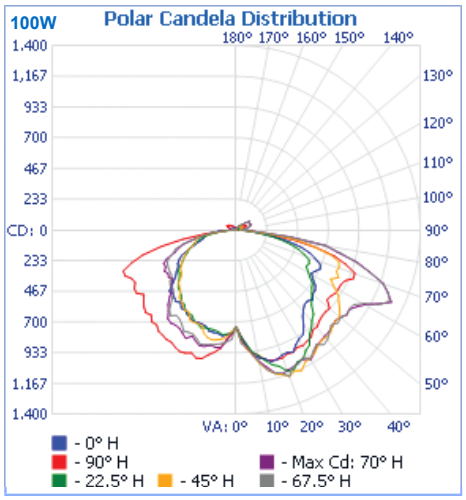

Lamp Specifications

Wattage	Lumens	L/W Ratio	CRI	CCT (KELVIN)	Rated Life
70W/28W	5,900/2,400	84	82-85	5000	100,000 hours
80W/32W	7,150/2,900	84	82-85	5000	100,000 hours
100W/40W	8,400/3,400	84	82-85	5000	100,000 hours
120W/48W	10,100/4,100	84	82-85	5000	100,000 hours
150W/60W	12,600/5,100	84	82-85	5000	100,000 hours

Ballast Specifications

System Wattage	Input Voltage	Input Current	Input Freq.	Power Factor	Ambient Temp	THD
82.6 / 36.9 dimmed	120-277V/480V*	0.63-0.29A / 0.16A	50/60Hz	>0.95	-40 to 130 F°	<10%
94.4 / 46.9 dimmed	120-277V/480V*	0.70-0.32A / 0.19A	50/60Hz	>0.95	-40 to 130 F°	<10%
118.0 / 58.5 dimmed	120-277V/480V*	0.93-0.42A / 0.22A	50/60Hz	>0.95	-40 to 130 F°	<10%
141.6 / 70.1 dimmed	120-277V/480V*	1.05-0.46A / 0.28A	50/60Hz	>0.95	-40 to 130 F°	<10%
166.0 / 85.0 dimmed	120-277V/480V*	1.35-0.61A / 0.35A	50/60Hz	>0.95	-40 to 130 F°	<10%

Application Image - ESBUS-EC-BL

Mondavi Center For The Performing Arts, Davis CA

*Legal Notice: Full Spectrum Solutions owns proprietary rights in the EverLast® Series of fixtures in the form of U.S. Patents No. D636,526; D636,518 Additional Patents Pending.

EverLast® Lighting A Product of Full Spectrum Solutions, Inc. 2009, All Rights Reserved
888-383-7578 www.everlastlight.com
2021 Wellworth Ave. Jackson Michigan, 49203 U.S.A.